Item# SML214130

Specifications

Category: Pendant
Fixture Dimension: D32" x H102"
Wire/Chain Length: 10ft.(3m) / 6.6ft.(2m)
Fixture Weight: 15.5Lbs. (7Kg)
Fixture Finish: Stain Black
Bulb: 9x40W E12 Base - NOT INCLUDED
Maximum Wattage: 40W
Voltage: 120V
Approved Location: Dry Location
Safety Certification: CETL

Assembly Instructions
Item# SML214130

1. Attach the Crossbar to the Outlet Box with the head of the Green Ground Screw facing you. Tighten until snug. Use standard wire connectors to make all wire connections. Twist connectors until wires are tightly joined together. Wrap each connection with approved electrical tape and carefully stuff all the connected wires into outlet box.

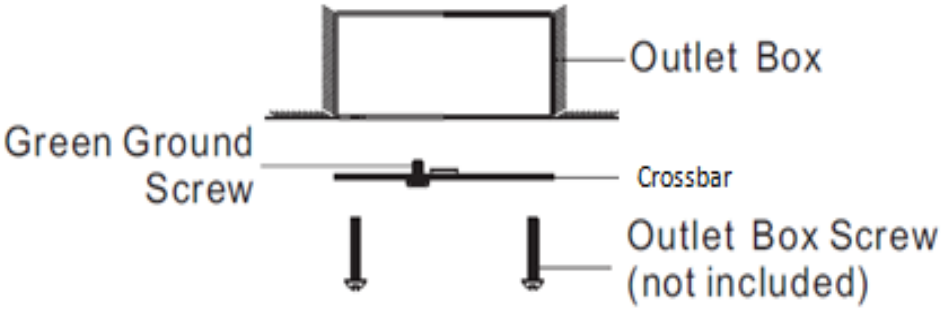

2. glass (A) first. Then insert the tube (B) snugly into glass. At last insert bulbs (not included) and screw snugly into place. DO NOT EXCEED MAXIMUM WATTAGE.

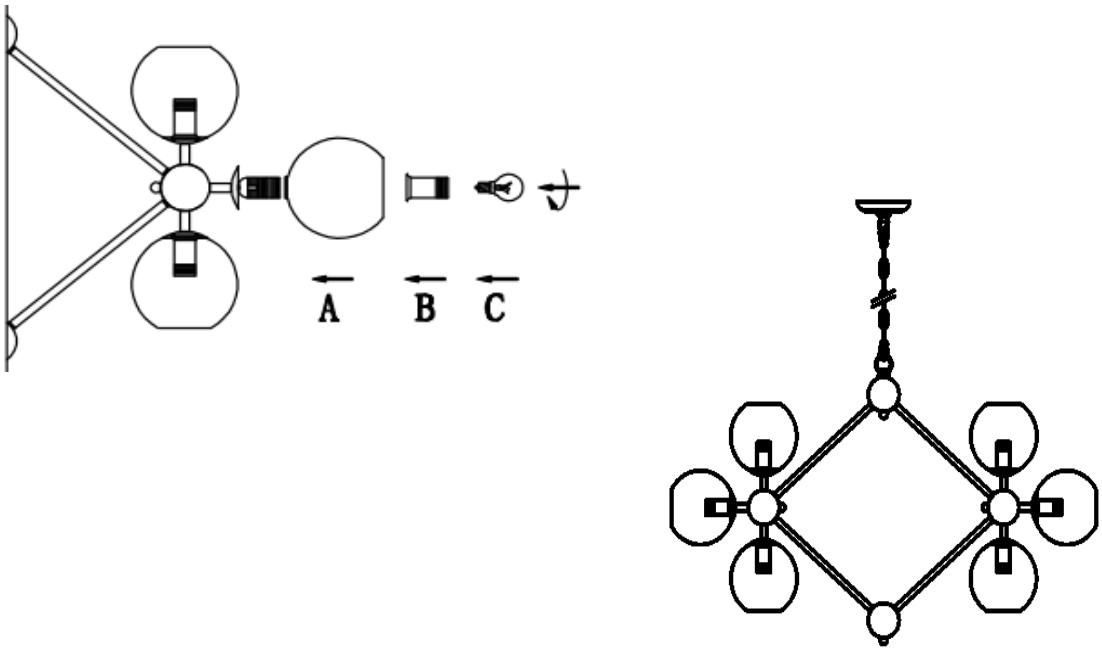

Wire Connections

ATTENTION

FIXTURE INSTALLATION MUST BE DONE BY A LICENSED ELECTRICIAN

SHUT OFF POWER SUPPLY AT FUSE OR CIRCUIT BREAKER

USE ONLY THE SPECIFIED BULBS & DO NOT EXCEED THE MAXIMUM WATTAGE

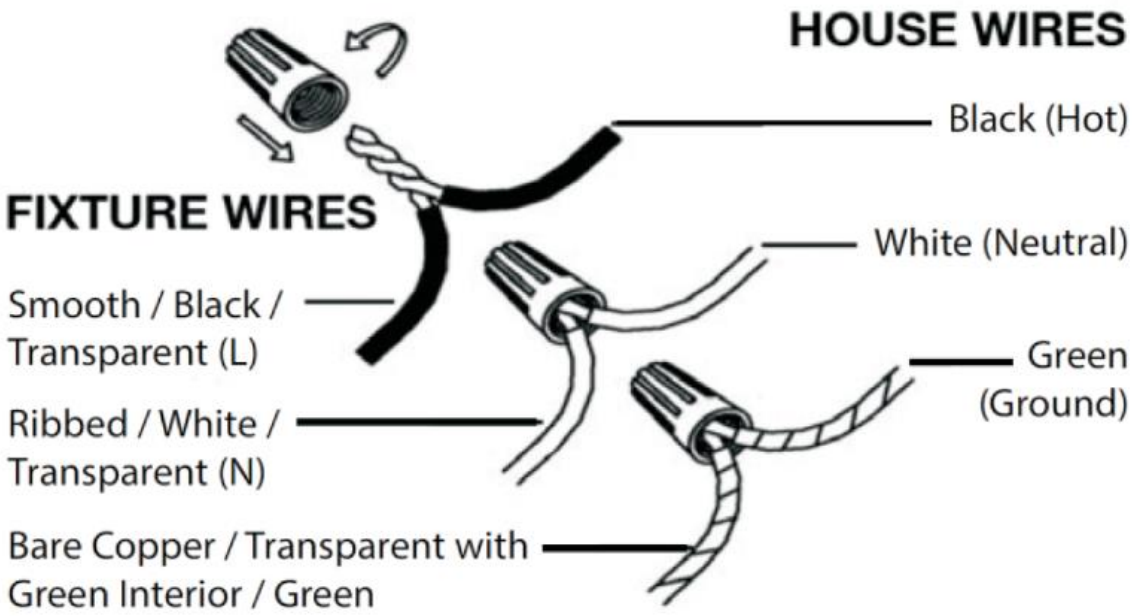

Use standard wire connectors to make all wire connections.

Twist connectors until wires are tightly joined together.

Wrap each connection with approved electrical tape and carefully stuff all the connected wires into outlet box.