Item# SML233117

Specifications

Category: Pendant Lamp

Fixture Dimension: D16"H24"

Wire/Chain Length: 118"/78.75"

Fixture Weight: 13Lbs(6Kg)

Fixture Finish: Crystal and Iron with Matt Black & Satin Brass

Bulb: 8x40W E12 Base-NOT INCLUDED

Maximum Wattage: 40W

Voltage: 120V

Approved Location: Dry Location

Safety Certification: CUL

Assembly Instructions

Item# SML233117

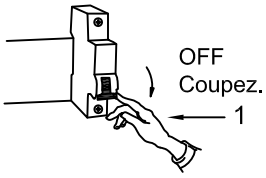

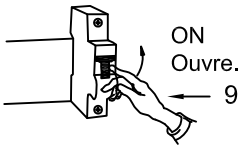

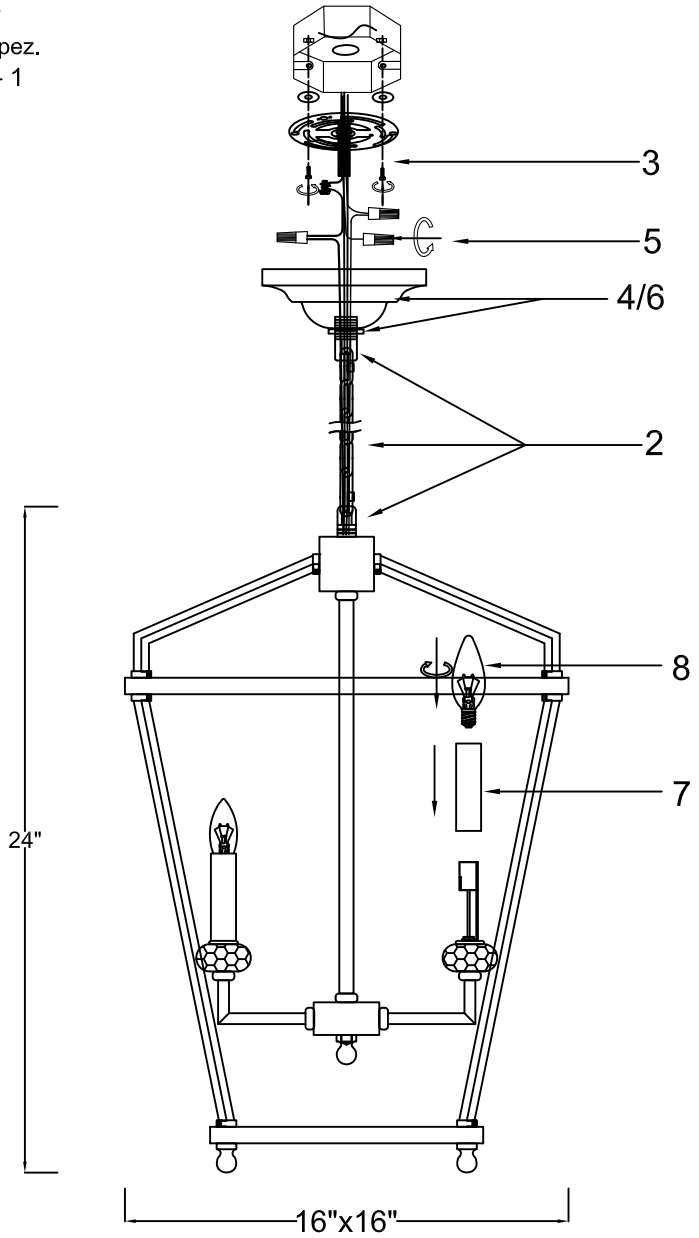

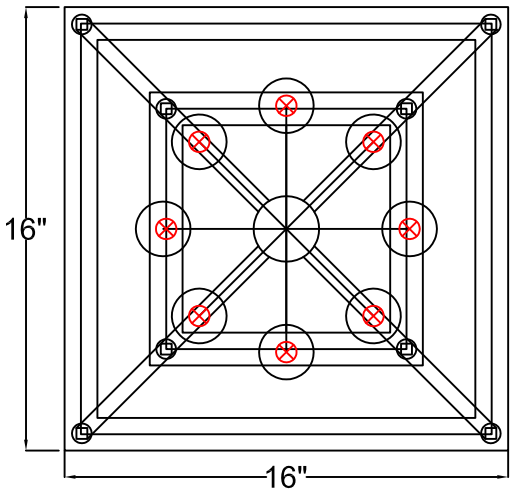

How to Install

1.Shut off Power,Do a complete inventory of all parts and components before you start installing.
2.Install the Mounting Plate on the outlet box.
3.Attach the Canopy to the Mounting Plate .
Secure it with Collar Loop and twist the Collar Ring off.
4.Use the wire connectors to connect wires.
5. Push the canopy up and Secure it with Collar Ring.
6.After safely attaching fixture into outlet box.
7.Install candles and bulbs.
8.Proceed to connecting the power.

Wire Connections

ATTENTION:

FIXTURE INSTALLATION MUST BE DONE BY A LICENSED ELECTRICIAN

SHUT OFF POWER SUPPLY AT FUSE OR CIRCUIT BREAKER

USE ONLY THE SPECIFIED BULBS & DO NOT EXCEED THE MAXIMUM WATTAGE

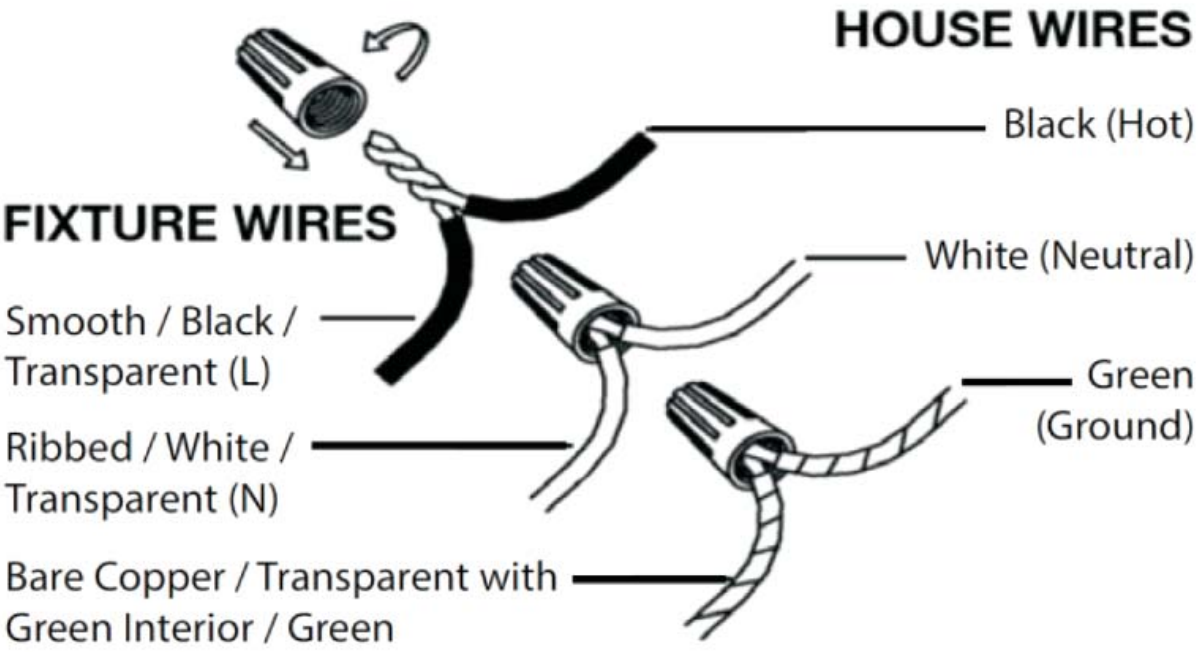

Use standard wire connectors to make all wire connections.

Twist connectors until wires are tightly joined together.
Wrap each connection with approved electrical tape and carefully stuff all the connected wires into outlet box.