Item# SML239101-BKGD

Specifications

Category: Pendant Lamp	Finish: Gold+Matt Black
Fixture Dimension: 47.25”L x 16”H x 16”W	Overall Height:94”
Chain/Rod Length: 2*24” + 2*12” + 1*6”	Wire Length: N/A
Bulb: Integrated LED : 3000K /4000K/5000K-6540Lumen*	Maximum Wattage per Bulb: 109W
Voltage: 120V	Fixture Weight: 8.4 Kg (18.52 Lbs)
Location Rating: Suitable for Damp Locations	Safety Certification: CETL

* Compatible Dimmers:

Lutron SCL-153P, Lutron TGCL-153P, Lutron MACL-153M, Lutron PD-6WCL RE, Lutron DV-603P, Lutron AY-600P

Wire Connections

ATTENTION

FIXTURE INSTALLATION MUST BE DONE BY A LICENSED ELECTRICIAN

SHUT OFF POWER SUPPLY AT FUSE OR CIRCUIT BREAKER

USE ONLY THE SPECIFIED BULBS AND DO NOT EXCEED THE MAXIMUM WATTAGE

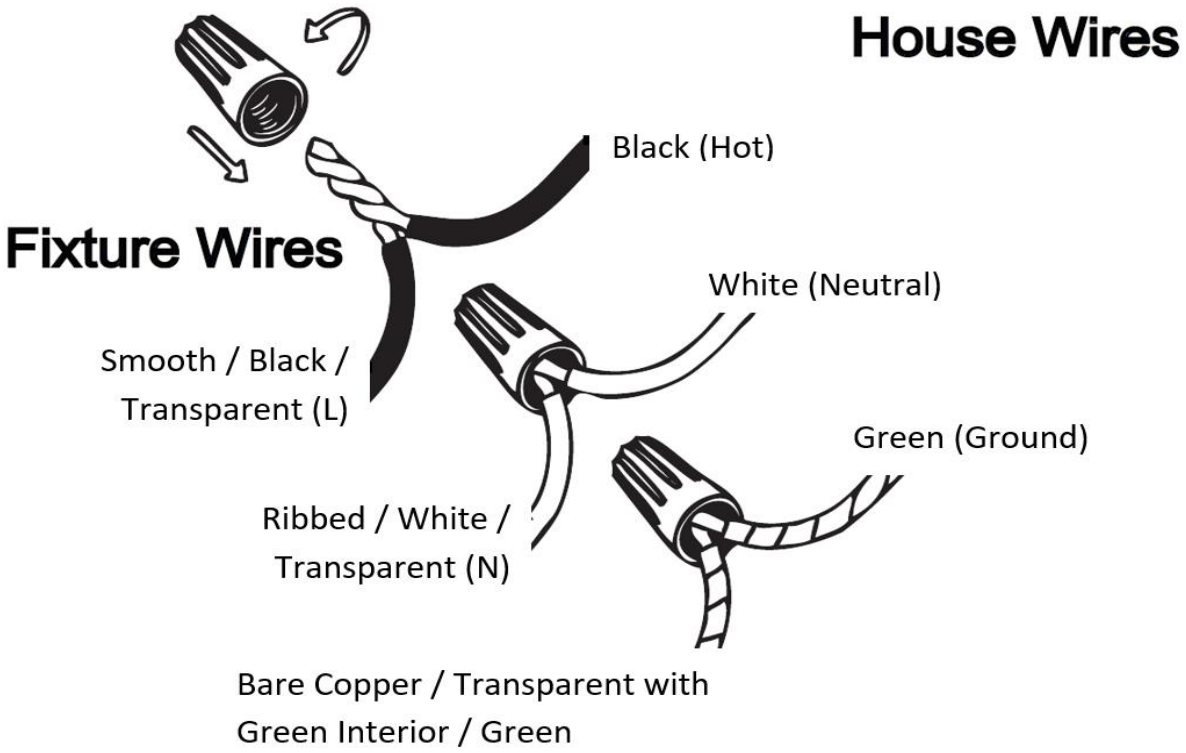

Use standard wire connectors to make all wire connections

Twist connectors until wires are tightly joined

Wrap each connection with approved electrical tape and carefully stuff all the connected wires into outlet box

Assembly Instructions

Item# SML239101-BKGD

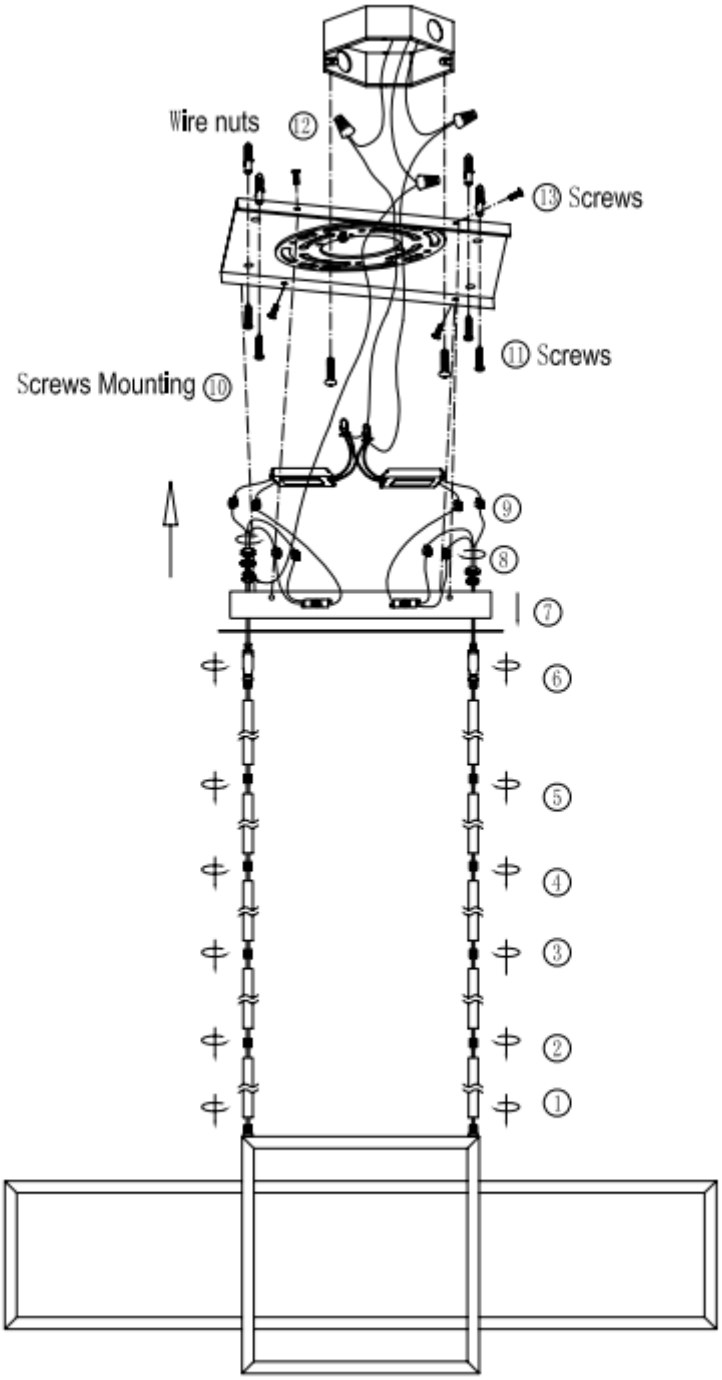

Wire connection instructions:

1.The Positive pole of the Driver connects to the RED wire from the LED light source

2.The White wire of the Dip Switch connects to the WHITE wire from the LED light source (5000k)

3.The Yellow wire of the Dip Switch connects to the BLACK wire from the LED light source (3000k)

Package Contents

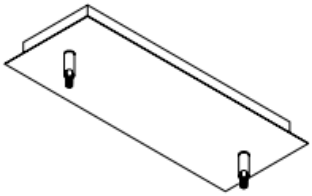

A Ceiling Canopy
X1

B 24"L ROD
X4

C 12"L ROD
X4

D 6"L ROD
X2

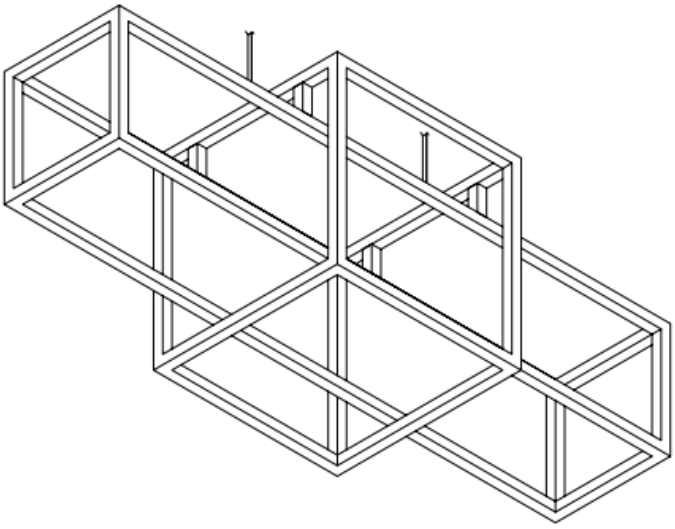

E Fixture Body
X1

Mounting Hardware

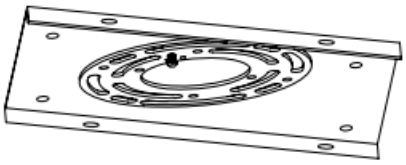

AA Crossbar Assembly
X1

CC Wire Connector
X3

DD Wall Anchor
X4

BB Canopy Screw
X4

EE Michine Screw
X2

FF Self-tapping Screw
X4